CONCRETE PRESSURE PIPE

REPAIR GUIDE

AMERICAN
Concrete Pressure Pipe
ASSOCIATION

TABLE OF CONTENTS

CONCRETE PRESSURE PIPE – REPAIR GUIDE

Introduction....1

Emergency Phone Numbers....1

Emergency Repair Questionnaire....2

Making a Durable Repair....5

Types of Concrete Pressure Pipes....6

AWWA C303, also known as "Bar-Wrap", "Concrete Cylinder"

AWWA C301, Lined Cylinder ("L-301") and Embedded Cylinder ("E-301") prestressed concrete pipe

AWWA C300, AWWA C302, and NC-301

Concrete Pressure Pipe Fittings and Mortar-Coated Steel Pipe....10

Repair Procedures

Quick Reference - (Repair Selection Guide)....11

Mortar or Concrete....13

Heat & Reshape or Weld On New Joint Ring....14

Spigot Field Adjustment....15

Exterior Joint Weld....15

Interior Joint Weld....16

INTRODUCTION

Concrete pressure pipe (CPP), when properly designed, manufactured and installed, will provide safe, reliable and continuous service under normal and transient conditions.

Though rugged and durable, this pipe is not designed to withstand impact from a backhoe, jackhammer or an auger. This guide provides a course of action to follow should such an event occur.

ACPPA member companies typically maintain stock of repair and replacement clamps, saddles, pipe sections, closures and other materials at their manufacturing facilities. If needed, non-stock repair materials may be quickly fabricated.

This guide describes the most common repair procedures for various types of CPP; however, not all repairs are covered. Actual pipe repair and replacement applications should be analyzed by governing authorities and pipeline owners.

EMERGENCY ASSISTANCE

For the best feedback in an emergency, make a record of the types and sizes of pipe in the system. It may also be helpful to provide a sketch showing the location, size and type of pressure pipe. Use the emergency repair questionnaire on page two to provide additional information. ACPPA members are available 24 hours a day for emergency repair assistance.

EMERGENCY PHONE NUMBERS

For further information or for emergency repairs, please visit the Contact page of our website at: **www.acppa.org/contact** or scan the QR code below.

NOTE:
All operations described in this guide should be performed in accordance with Occupational Safety and Health Act (OSHA) regulations, provincial, state and local codes and recognized safe practices. Material handling equipment shown or described in this guide should have sizes and capacities determined by a qualified person.

Emergency Repair **Questionnaire**

If an emergency repair is needed, please try to answer these ques. ons before contacting your pipe manufacturer.

1. Who was the original manufacturer of the damaged piece?
   - ☐ DECAST Ltd.
   - ☐ Rinker Pipe
   - ☐ Thompson Pipe Group (TPG)
   - ☐ Ameron
   - ☐ Canron
   - ☐ Cretex
   - ☐ Forterra
   - ☐ GHA
   - ☐ Hanson
   - ☐ Hyprescon
   - ☐ Interpace
   - ☐ Lafarge
   - ☐ Lockjoint
   - ☐ Munro
   - ☐ Price Brothers
   - ☐ United
   - ☐ Vianni Pipe Co.
   - ☐ Other _____

2. Do you know the following information about the damaged piece?
   Owner: _____
   Installation Contractor: _____
   Manufacturer's Job Number: _____
   Mark Number/Pipe Class: _____
   Installation Date: _____

3. What is the diameter and type of the damaged piece?
   Inside Diameter: _____in **OR** _____ mm
   - ☐ Reinforced Concrete Pressure Pipe, Steel-Cylinder Type - C300
   - ☐ Reinforced Concrete Pressure Pipe, Noncylinder Type - C302
   - ☐ Prestressed Concrete Pressure Pipe, Lined Steel-Cylinder Type - C301 (LCP)
   - ☐ Prestressed Concrete Pressure Pipe, Embedded Steel Cylinder Type - C301 (ECP)
   - ☐ Bar-Wrapped Concrete Pressure Pipe, Steel-Cylinder Type - C303
   - ☐ Other _____

4. If the type of the damaged piece is unknown, what is the outside measured circumference of the pipe barrel? _____ in **OR** _____ mm

5. Is the damaged piece a pipe or a fitting?
   - ☐ Pipe
   - ☐ Fitting

6. If the damaged piece is a pipe, is it a special? Select all that apply.
   - ☐ Bevel Pipe
     Angle of Deflection: _____ degrees
   - ☐ Restrained Joint(s)
   - ☐ Short Pipe
   - ☐ Double coated, painted, bonded, etc.

7. If the damaged piece is a fitting, what type is it? Select all that apply.

☐ Tee/Wye
Is there a crotch plate? Yes ☐ No ☐
☐ Bevel Adaptor
Angle of Deflec. on: _____ degrees
☐ Joint Adaptor
☐ Reducer
☐ Bend / Elbow
☐ Angle of Deflection: _____ degrees
☐ Other _____

8. If the damaged piece has a restrained joint(s), what type of joint(s) are present?Select all that apply.

☐ Snap Ring Bell
☐ Harness Bell
☐ Harness Spigot
☐ Holdfast Bell
☐ Holdfast Spigot
☐ Welded Joint (WJ) – External
☐ Internally Welded Joint (IWJ)
☐ Other _____

9. Does the damaged piece have an outlet damaged? Yes ☐ No ☐
Are there multiple outlets on the piece? Yes ☐ No ☐

Please provide the following information for each outlet (if applicable):

Outlet 1:
Outlet Diameter: _____in OR
_____mm

Outlet Joint Type:

☐ CPP Bell or Spigot ☐ Plain End
☐ Flange Joint ☐ Other _____
☐ MJ Bell

Outlet 2:
Outlet Diameter: _____in OR
_____mm

Outlet Joint Type:

☐ CPP Bell or Spigot ☐ Plain End
☐ Flange Joint ☐ Other _____
☐ MJ Bell

Outlet 3:
Outlet Diameter: _____in OR
_____mm

Outlet Joint Type:

☐ CPP Bell or Spigot ☐ Plain End
☐ Flange Joint ☐ Other _____
☐ MJ Bell

Outlet 4:
Outlet Diameter: _____in OR
_____mm

Outlet Joint Type:

☐ CPP Bell or Spigot ☐ Plain End
☐ Flange Joint ☐ Other _____
☐ MJ Bell

10. What is the laying length of the damaged piece? _____. OR _____m

11. What are the internal pressures of the line?

    Operating Pressure: _____psi OR _____kPa

    Total Operating + Surge Pressure: _____psi OR _____kPa

    Head: _____ft OR _____m

12. What is the depth of cover over the pipe?

    Current: _____ft OR _____ **Original Design**: _____ft. OR _____m

13. Is the cause of damage known? Yes ☐ No ☐

    If yes, how did the damage occur?

    _____

14. Is the pipe leaking? Yes ☐ No ☐ If yes, is it leaking at a joint? Yes ☐ No ☐

15. What is the purpose of the line? (e.g. Watermain, Forcemain, Intake, Sewer, Cooling water etc.)

    _____

16. Does the damage extend through the entire pipe wall? Yes ☐ No ☐ Unknown ☐

17. What are the dimensions and locations of the damaged area?

    Inches (in): Width _____ Length _____ Height_____ OR

    Millimeters (mm): Width _____ Length _____ Height_____

    Location: Middle of pipe_____ Proximity of a joint_____

If the answer to any of the following questions is 'Yes', please provide the information to your pipe manufacturer to expedite the repair process.

18. Do you have any pictures of the damage? Yes ☐ No ☐

19. Do you have clear access to the site of the damage or to a delivery point? Yes ☐ No ☐

20. Do you need your pipe manufacturer's personnel to assist in facilitating the repair? Yes ☐ No ☐

21. Is this a temporary fix to stop the flow of water at the damaged location and prepare for a future permanent repair or replacement, or are you effecting the permanent repair now?
    Temporary ☐ Permanent ☐

22. Direct contact info for the person(s) responsible for making and approving decisions on this repair:

    Name: _____

    Phone Number: _____

    Email Address: _____

MAKING A **DURABLE REPAIR**

Completed repairs on concrete and steel pressure pipe should provide both the strength to maintain the pipeline pressure and protection from corrosion.

Pressure containment strength is generally established by:

- assuring adequate gasket compression
- welding
- installing additional circumferential reinforcement on existing pipe or
- by pipe replacement.

Corrosion protection of the repair is generally provided by coating all exposed steel with a 1" (25 mm) minimum thickness of Portland cement mortar.

If the pipeline is bonded for monitoring or cathodic protection, the repair steel should also be electrically connected to the pipeline steel.

The proper procedure to repair leaks in damaged pressure pipe depends on the pipe type. The type of pipe determines whether the pipe has a cylinder, the location of the cylinder in the pipe wall and whether the pipe is prestressed.

Additionally, it is important to know if this a temporary fix to stop the flow of water and prepare for a future permanent repair now.

TYPES OF CONCRETE **PRESSURE PIPES**

AWWAC303, Bar-Wrapped Pipe

A common type of concrete pressure pipe manufactured by ACPPA member companies is bar-wrapped cylinder concrete pipe. Prior to 1970, this pipe was known as American concrete cylinder pipe or P-381. From 1970-1995, it was marketed as pretensioned concrete cylinder pipe (P-303). This pipe is manufactured in diameters ranging from 10" (250 mm) to 72" (1830 mm). The bell, spigot, cylinder and spiral reinforcing rod on this pipe are all made of mild steel and can be welded. However, the cylinder for C303 pipe and other types of concrete pressure pipe can be as thin as 16 gauge (0.0598"/1.5 mm), so only welders experienced in making watertight welds on thin steel should attempt welding repairs on concrete pipe cylinders.

Bar-Wrapped Cylinder Pipe

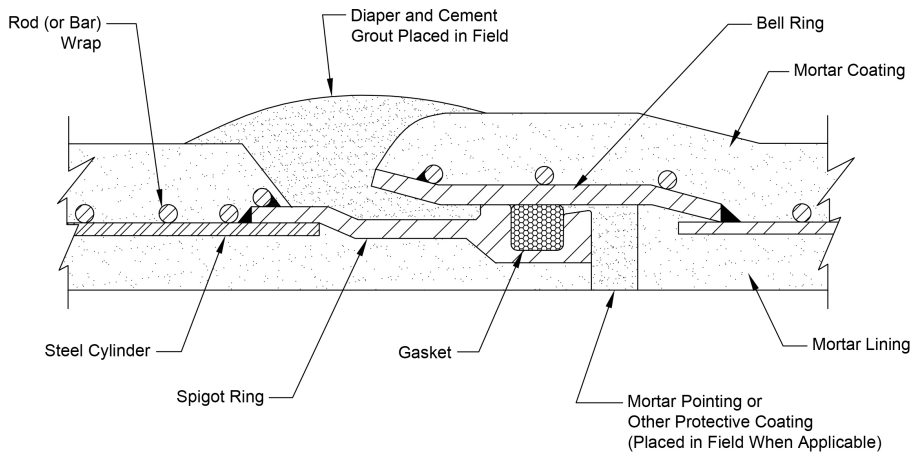

CAUTION

Although it is the stance of ACPPA that welding of a 16 gauge cylinder in the field should not be performed under any circumstance, it is understood that a situation may arise in the field where the owner deems it necessary to deviate from this recommendation. In such instances, the owner should ensure that the work is being performed by an experienced contractor, and that both the contractor and engineer of record (EOR) have an extensive working knowledge of the pipe. The owner, EOR and contractor should all be aware of any potential safety and performance issues that may be associated with the work that is to be carried out. The working plan should be established such that all parties involved are in agreement that the work to be performed can be done in a safe and acceptable manner.

TYPES OF CONCRETE **PRESSURE PIPES (Cont.)**

AWWA C301, LCP and ECP

ACPPA member companies manufacture two types of AWWA C301 concrete pressure pipe: prestressed concrete lined cylinder pipe (LCP) and prestressed concrete embedded cylinder pipe (ECP). LCP pipe has also been referred to as L-301, 301(L) and SP-5, and ECP pipe has also been referred to as E-301, 301(E) and SP-12. LCP has been manufactured in 16" (400mm) through 60" (1500mm) diameters and ECP has been manufactured in 24" (600mm) through 156" (4000mm) diameters. The bell, spigot and cylinder of these pipes are made of mild steel and the cylinder is usually 16 gauge (0.0598"/1.5mm) material. The spiral prestressing wire is very high strength steel and CANNOT BE WELDED. For this reason, repair procedures for these types of pipe usually use circumferential clamps or similar materials which do not require structural support from the prestressing wire.

Lined Cylinder Pipe

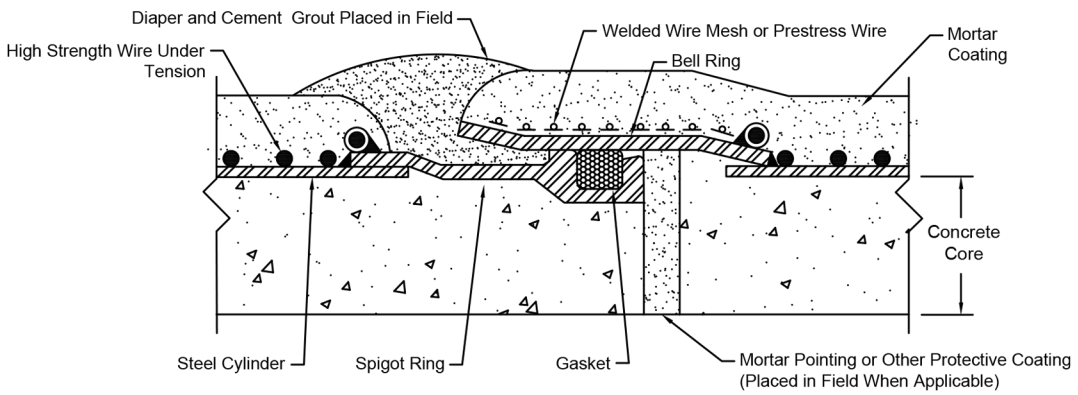

Embedded Cylinder Pipe

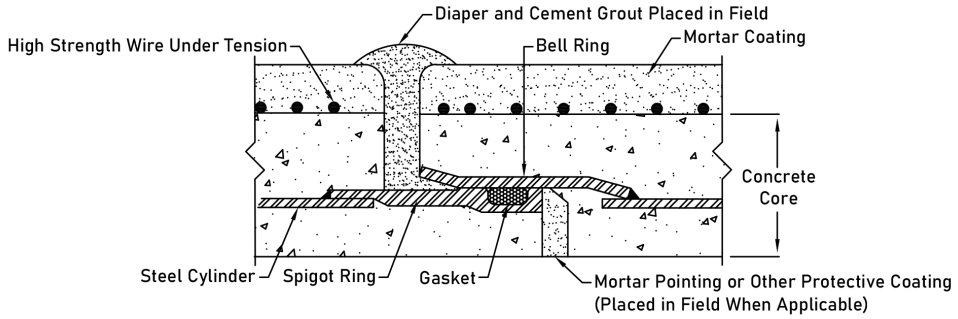

CAUTION

Although it is the stance of ACPPA that welding of a 16 gauge cylinder in the field should not be performed under any circumstance, it is understood that a situation may arise in the field where the owner deems it necessary to deviate from this recommendation. In such instances, the owner should ensure that the work is being performed by an experienced contractor, and that both the contractor and engineer of record (EOR) have an extensive working knowledge of the pipe. The owner, EOR and contractor should all be aware of any potential safety and performance issues that may be associated with the work that is to be carried out. The working plan should be established such that all parties involved are in agreement that the work to be performed can be done in a safe and acceptable manner.

TYPES OF CONCRETE **PRESSURE PIPES (Cont.)**

AWWA C300, AWWA C302 and NC-301

The C300 pipe bell, spigot, cylinder and steel cage reinforcement are made of mild steel. The pipe's watertight cylinder is embedded several inches under the outer pipe wall surface.

C302 and NC-301 depend on the reinforced concrete pipe wall to contain the pipeline pressure. In these pipes, there is no steel cylinder against which a seal may be achieved. Holes in these pipe walls can often be sealed by compressing a gasket against the outside of the pipe with gasketed repair saddle (see page 23). C302 and NC-301 pipe have various joint configurations. Contact ACPPA member companies for more information.

Reinforced concrete cylinder pipe (AWWA C300) has sometimes been marketed as V-300, SP-3 or Lock Joint Cylinder Pipe.

Reinforced non-cylinder concrete pipe (AWWA C302) has sometimes been marketed as SP-1, SP-25 or SP-32 depending on the type of joints.

Pre-stressed non-cylinder pipe (NC-301) has sometimes been marketed as SP-23, SP-28 or SP-31.

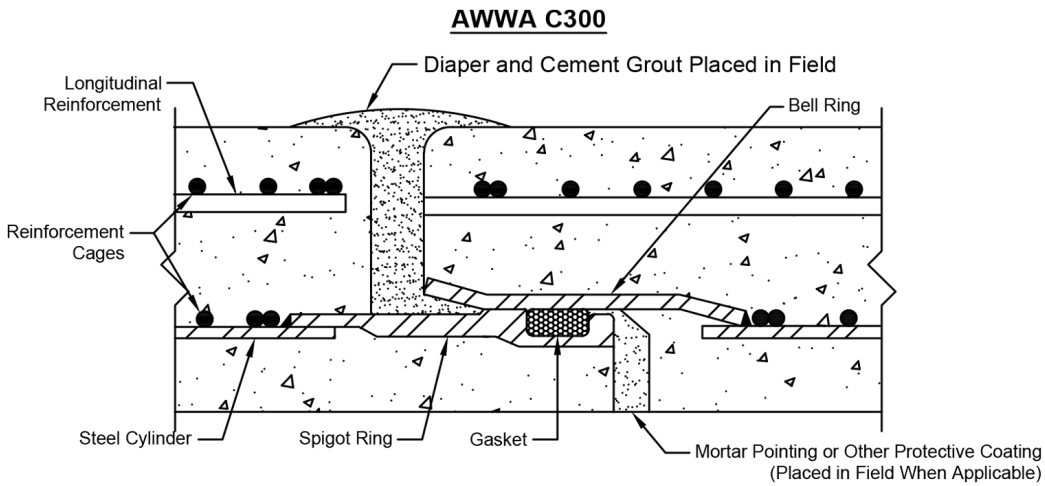

CAUTION

Although it is the stance of ACPPA that welding of a 16 gauge cylinder in the field should not be performed under any circumstance, it is understood that a situation may arise in the field where the owner deems it necessary to deviate from this recommendation. In such instances, the owner should ensure that the work is being performed by an experienced contractor, and that both the contractor and engineer of record (EOR) have an extensive working knowledge of the pipe. The owner, EOR and contractor should all be aware of any potential safety and performance issues that may be associated with the work that is to be carried out. The working plan should be established such that all parties involved are in agreement that the work to be performed can be done in a safe and acceptable manner.

TYPES OF CONCRETE **PRESSURE PIPES (Cont.)**

AWWA C300, AWWA C302, and NC-301 (Cont.)

C302 Concrete Spigots

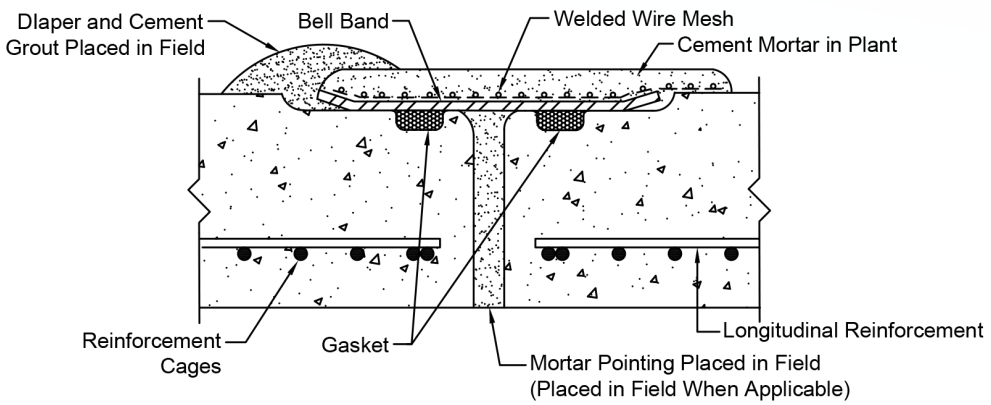

C302 Steel Bell and Spigot

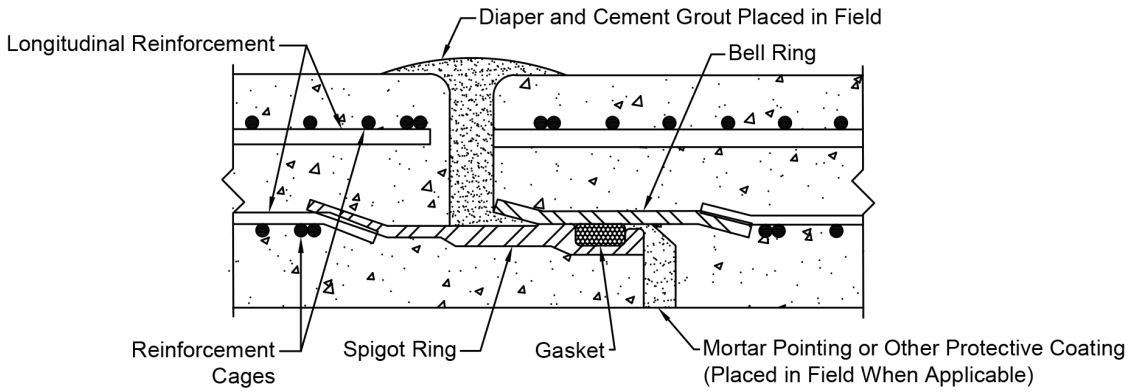

NOTE
Most AWWA C302 and some NC-301 have steel bells and spigots which can be welded to seal joint leaks.

TYPES OF CONCRETE PRESSURE PIPES (Cont.)

AWWA C300, AWWA C302, and **NC-301** (Cont.)

NC-301: 72", 78" & 96"

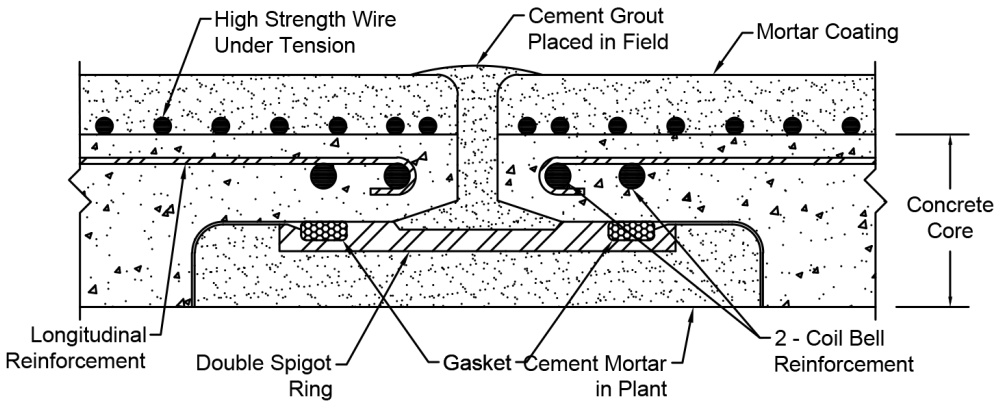

REPAIR PROCEDURES

QUICK REFERENCE

Typical repair procedures for various types of pipe and conditions are listed here. Some repairs can be made with the pipeline pressurized, provided there is no leak with sufficient water volume or pressure to endanger repair personnel or to complete repair. Repairs can also be done with isolation of the damaged section with linestops

Other repairs can be made with the pipeline full but depressurized in order to reduce leakage to a level which will not interfere with the installation of the repair. Where pipe sections must be replaced, the line must be drained.

Any steel used in repairs on electrically bonded pipelines must be made electrically continuous with the pipeline steel and all repair and pipe steel must be properly protected with Portland cement mortar.

PROBLEM	REPAIR	PAGE
Mortar or Concrete Damage		13
Joint Rings (Pre-Installation)	Heat & reshape or weld on new joint ring	14
AWWA C303		
Joint repairs on existing pipe		
-Pipe under low or no pressure		
• All diameters - slight or no seeping	Exterior joint weld	15
• Larger (>30"/750 mm) diameters (requires draining & access to interior)	Interior joint weld	16
-Pipe under operating pressure	Weld-on repair saddle	18
Pipe barrel repairs		
-Pipe not under pressure		
• Steel damaged but lining intact	Welded repair	17
• Steel and lining damaged	Dry Tap	26
-Pipe under pressure	Weld-on repair saddle	18-22
AWWA C301(L)		
Joint repairs on existing pipe		
-Pipe under low or no pressure		
• All diameters - slight or no seeping	Exterior joint weld	15
• Larger (>30"/750 mm) diameters (requires draining & access to interior)	Interior joint weld	16
Pipe barrel repairs		
• Wire damaged but cylinder intact	Reinforcing Clamp	30
• Cylinder damaged	Cylinder Repair Sleeve	31

REPAIR PROCEDURES (Cont.)

QUICK REFERENCE (Cont.)

PROBLEM	REPAIR	PAGE
AWWA C301(E)		
Joint repairs on existing pipe	Interior joint weld	16
Pipe barrel repairs		
• Wire damaged but cylinder intact	Reinforcing Clamp	30
• Cylinder damaged	Cylinder Repair Sleeve	31
AWWA C300		
Joint repairs on existing pipe		
-Pipe not under pressure	Interior joint weld	16
Pipe barrel repairs		
-Pipe not under pressure steel damaged but lining intact	Welded repair	17
AWWA C302		
Joint repairs on existing pipe		
-C302 pipe not under pressure	Interior joint weld	16
-Pipe under pressure or not	Gasketed repair saddle	23
Pipe barrel repairs		
-Pipe under pressure	Gasketed repair saddle	23
NC-301		
Contact ACPPA member companies for more information		

* Contact your ACPPA member concrete pressure pipe supplier for full details and support.

REPAIR **PROCEDURES** (Cont.)

MORTAR OR CONCRETE

Repair of Unlaid Pipe or Interior Repairs on Installed Pipe

1. Chip back to sound lining or coating. The borders of the sound material around the repair area should be slightly undercut to key the repair mortar in place. Care must be taken during chipping to avoid nicking any steel, especially any cylinder or prestressing wires.
2. Clean and wet the surface of the repair area. Apply a thick cement slurry to the area to be patched.
3. Ram and compact a stiff mortar into the repair area. The mortar shall be worked under the borders of the surrounding mortar or concrete and under or around any exposed reinforcement or prestressing wire. Wire mesh may be useful for supporting the mortar over large repair areas. The surface of the repair mortar shall be shaped to the pipe contour in a manner assuring there is at least ¾" (19 mm) coverage over any pipe steel.
4. The repair mortar should be one part portland cement to three parts sand mixed with as little water as possible so the mortar will be very stiff but workable. Repairs made with such mortar should be protected while being cured for 24 hours using intermittent water spray, wet burlap, plastic sheet or a curing compound. Alternatively, the repair mortar can be a high cement content, high pH, no chloride, non-shrink, quick set mortar so the repair will set up quickly and require no special curing procedures.
5. For portable water pipeline, ensure repair material is an NSF-61 approved product.

Exterior Repairs on Installed Pipe

Exterior mortar or concrete repairs on installed pipe can be made as outlined above. Alternatively, after the exterior damaged mortar or concrete has been removed and the area of damage cleaned, and inspected to assure cylinder and wire integrity has not been compromised, the pipe exterior can be encased with mortar or concrete. This can be accomplished either by placing a joint wrapper to straddle the repair area and filling the wrapper with mortar, or by backfilling the trench pipe zone in the repair area with concrete or mortar.

All mortar repairs should be protected from freezing until they have cured.

REPAIR **PROCEDURES** (Cont.)

HEAT & RESHAPE OR WELD ON NEW JOINT RING

C303, C301(L) and C301(E) Repair Procedure

1. Joint rings which are misshaped can sometimes be heated and hammered back to essentially their original configuration. Such a repair must only be made: (a) with the approval of the owner's inspector or representative; and (b) under the supervision of an ACPPA member company services representative.

2. After the bell or spigot is repaired, all damaged mortar or concrete around the repair must be removed and replaced.

3. If the joint ring cannot be repaired, a new ring can be provided by an ACPPA member company to be welded to the damaged one.

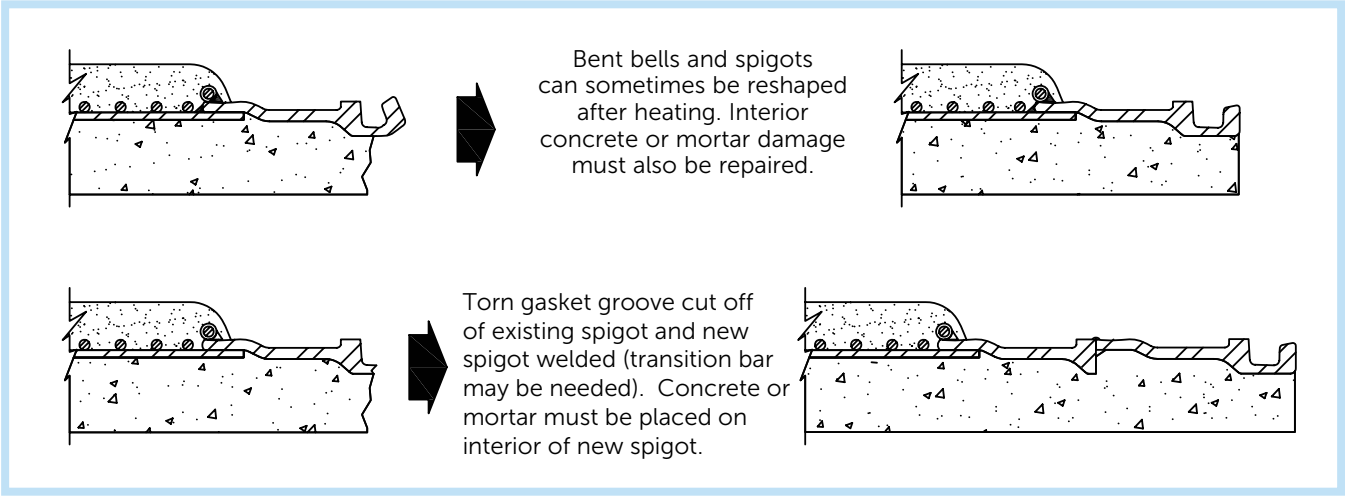

REPAIR **PROCEDURES** (Cont.)

EXTERIOR JOINT WELD

C303 and C301(L) Repair Procedure

1. Remove sufficient exterior mortar or concrete to provide access for complete circumferential weld. **Use caution to avoid breaking the prestressing wire on LCP or rod reinforcement on bar-wrapped pipe.**
2. Reduce the gap between materials to be welded. This may require the use of a mild steel filler rod or bar, or heating and flattening the bell flare, or similar preparation, depending upon the extent of joint overlap.
3. Place a continuous, watertight weld around the entire circumference of the joint.
4. Repair exterior mortar or concrete.
5. Ensure joint is diapered and grouted upon completion of repair.

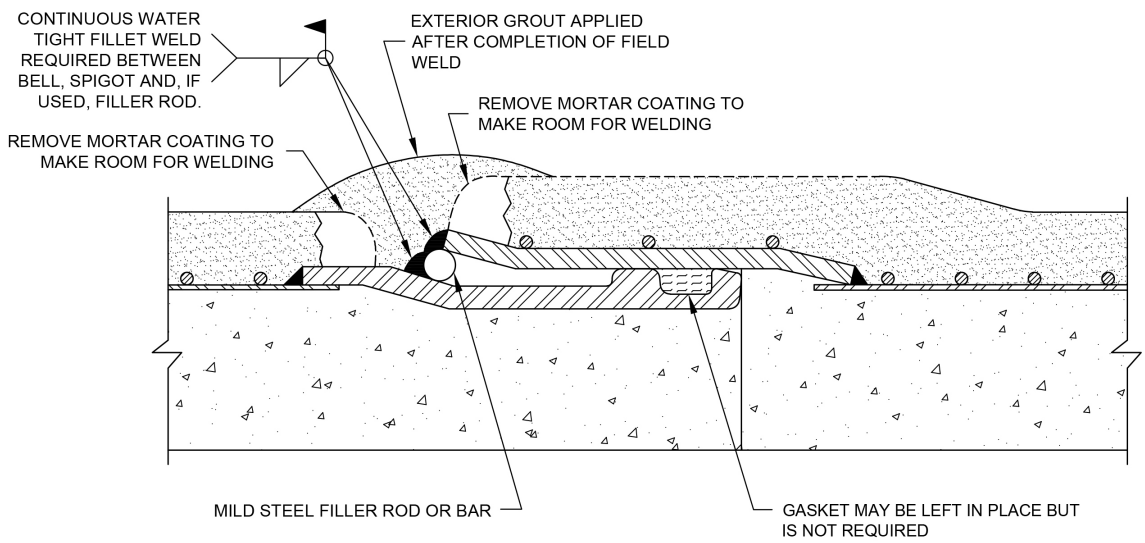

NOTE

The weld must be continuous and watertight, so the gasket is not needed. The joint configuration and need for filler material will vary depending on joint overlap. Contact ACPPA member companies for other concrete pipe types.

REPAIR **PROCEDURES** (Cont.)

INTERIOR JOINT WELD (For Larger Diameter Pipes, (>30"/750mm)

C303, C301(L), 301(E), C302, C300 and some NC-301 Repair Procedure

1. The line must be dewatered and access to the interior provided. If no entrance is available, a saddle type manhole can be installed.
2. To repair joints where the gasket has already been installed, place a fillet weld between the bell and spigot. See Detail A below. Alternatively, place a prefabricated, segmented ring as shown in Detail B and weld in place. The first pass should be fast, "downhill", and may need to be intermittently cooled with a wet rag to minimize smoke from the gasket. Alternatively or if needed, place a 3/8" (9.5 mm) mild steel rod around the joint and weld solid.
3. When the weld is completed, clean the interior joint recess and repair the interior concrete and mortar.
4. Examine the adjacent interior joints to assure they do not need to be welded or re-mortared. Where re-mortaring is required, the exterior should be examined and re-mortared if necessary.
5. Caution is required when welding LCP joint. There may be pre-stressing wire wrapped over the bell.

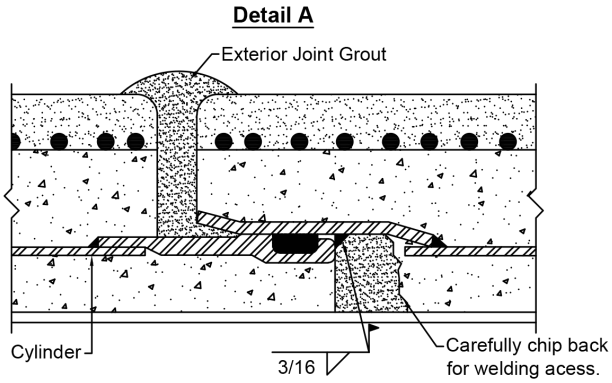

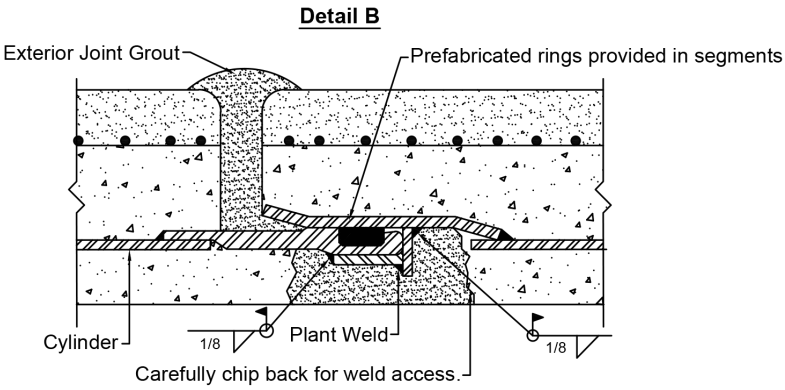

NOTE

-The welds must be continuous and watertight.
-Minimum weld sizes shown

REPAIR **PROCEDURES** (Cont.)

Welded Repair for Damaged Cylinder:

C303 and C300 Repair Procedure

1. Remove the mortar coating or concrete down to the cylinder within a few inches around the damaged area. Cut and bend back reinforcing rods.
2. Center a properly designed steel patch over the hole in the cylinder and weld it in place with a watertight fillet weld around the perimeter of the patch (see Caution).
3. Straighten and weld the cut reinforcing rods back together. If necessary, use a splice on each wrap. For C300 pipe exterior concrete should be repaired with concrete repair patch after reinforcing has been spliced.
4. Cover all exposed steel with a 1" (25 mm) minimum thickness cement mortar.

Remove coating or concrete down to cylinder. Cut and bend back mild steel rods.

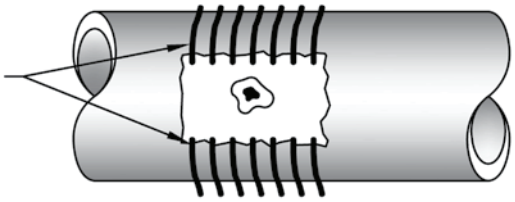

Fillet weld patch to cylinder. Straighten and weld each rod together. If necessary, use a splice on each rod.

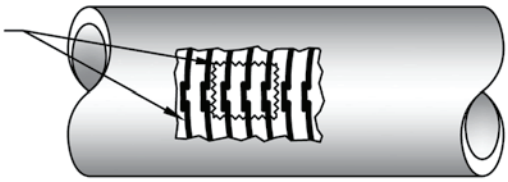

Caution

We recommend this procedure only be used for cylinders 12 gauge or thicker. Please contact an ACPPA member company for repair methods on thinner cylinders.

REPAIR **PROCEDURES** (Cont.)

Weld-On Repair Saddle

C303 Repair Procedure

The standard repair saddle is 24" (610 mm) wide. Wider repair saddles may be quickly fabricated if needed.

1. Excavate necessary clearance around the damaged area of pipe for installation of repair saddle. Recommended clearances are shown in sketch.
2. Remove a 5" (127 mm) wide area of mortar coating around the entire circumference of the pipe cylinder on each side of the damaged area. The standard repair saddle is 24" (610 mm) wide, thus the centerlines of the chipped areas should be approximately 24" (610 mm) apart. Please note it is neither necessary nor desirable to remove all the mortar coating or exterior concrete surrounding the damaged area of the pipe.

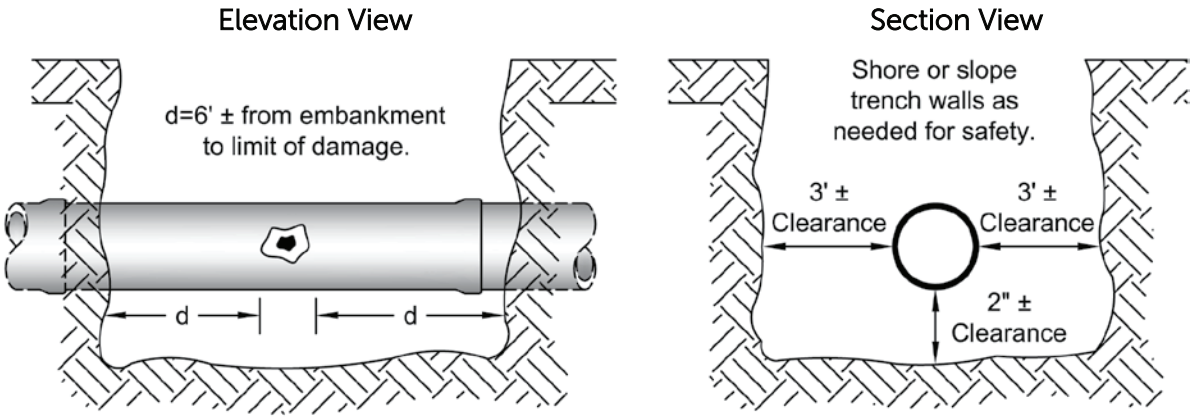

REPAIR **PROCEDURES** (Cont.)

Weld-On Repair Saddle (Cont.)

C303 Repair Procedure (Cont.)

3. Cut and remove circumferential reinforcement in the area of each 5" (127 mm) band which will be under the repair saddle. Unwind the circumferential reinforcement in the area of each band which will be outside the repair saddle. This exposes the bare cylinder for welding.

Bar-Wrapped Pipe

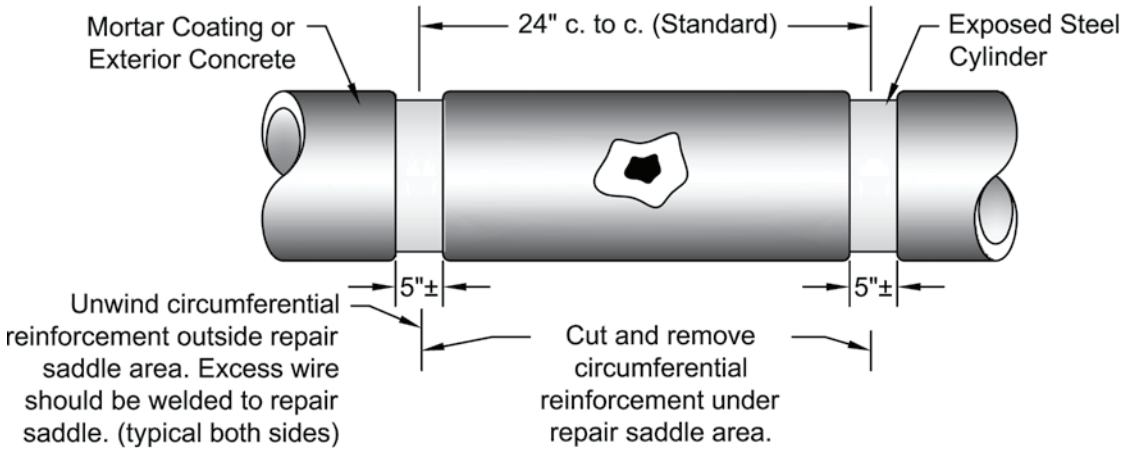

REPAIR **PROCEDURES** (Cont.)

Weld-On Repair Saddle (Cont.)

C303 Repair Procedure (Cont.)

4. Remove the plugs and place the two halves of the repair saddle around the pipe. Tighten the halves together using a set of come-alongs. Weld the two halves of the repair saddle to the pipe and each other using watertight welds (see Caution). One or more outlets are positioned at the bottom to allow water to escape.
5. Rewind the circumferential reinforcement outside each end of the saddle around the pipe so it is placed in its original location. Weld each free end of the reinforcement to the saddle.
6. Install the plugs in the couplings.
7. Inspect the repair saddle for any leaks and repair as necessary.
8. If possible, drain the recess between the saddle and pipe before filling it with a cement slurry.
   *Ensure opening is sealed on pipe ID to prevent cement slurry from entering the pipe.
9. Reinstall and tighten plugs.
10. Protect all exposed steel with a 1" (25 mm) minimum thickness cement mortar.

Bar-Wrapped Pipe

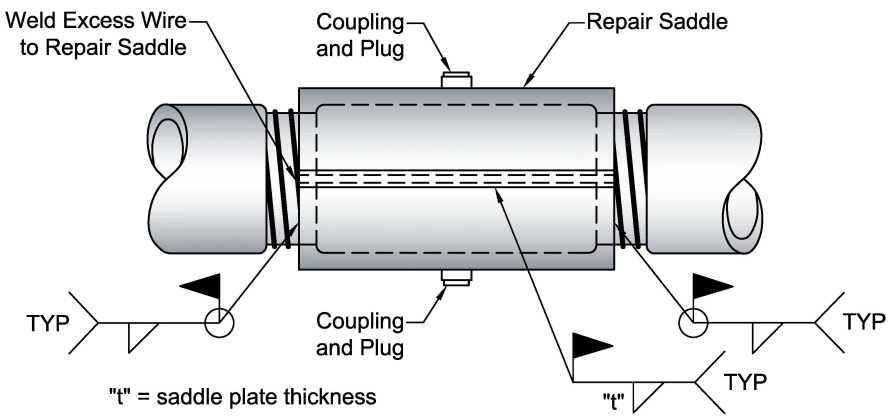

Caution

We recommend this procedure only be used for cylinders 12 gauge or thicker. Please contact an ACPPA member company for repair methods on thinner cylinders.

Although it is the stance of the ACPPA that welding of a 16 gauge cylinder in the field should not be performed under any circumstance, it is understood that a situation may arise in the field where the owner deems it necessary to deviate from this recommendation. In such instances, the owner should ensure that the work is being performed by an experienced contractor, and that both the contractor and engineer of the record (EOR) have extensive working knowledge of the pipe. The owner, EOR and contractor should all be aware of any potential safety and performance issues that may be associated with the work that is to be carried out. The working plan should be established such that all parties involved are in agreement that the work to be performed can be done in a safe acceptable manner.

REPAIR **PROCEDURES** (Cont.)

Weld-On Repair Saddle (Cont.)

C303 Repair Guide (Cont.)

Top Piece:

Steel plate typically 24" long, rounded 180° with full length "t" thickness bars welded to each longitudinal edge, with coupling and plug, attached to two steel plate 180° rings.

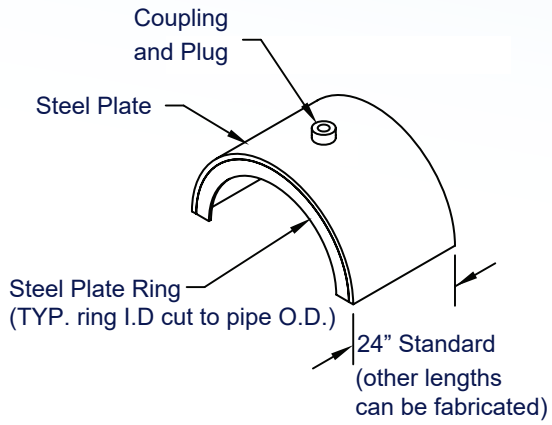

Bottom Piece:

Steel plate, typically 24" long, rounded 180° with full length "t" thickness bars welded to each longitudinal edge, with coupling and plug, attached to two steel plate 180° rings.

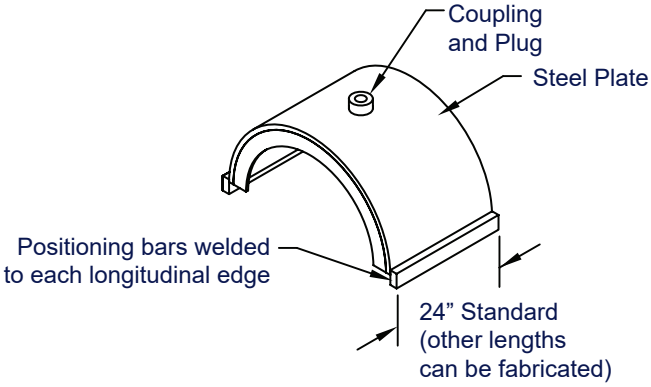

Note

Steel plate thickness "t" (in inches) may be calculated by the formula:

$$\text{"t" Min} = \frac{\text{(I.D. Saddle) (Working Pressure)}}{2f_s}$$

* f_s = 18,000 psi

REPAIR **PROCEDURES** (Cont.)

Weld-On Repair Saddle (Cont.)

Assembled Repair Saddle

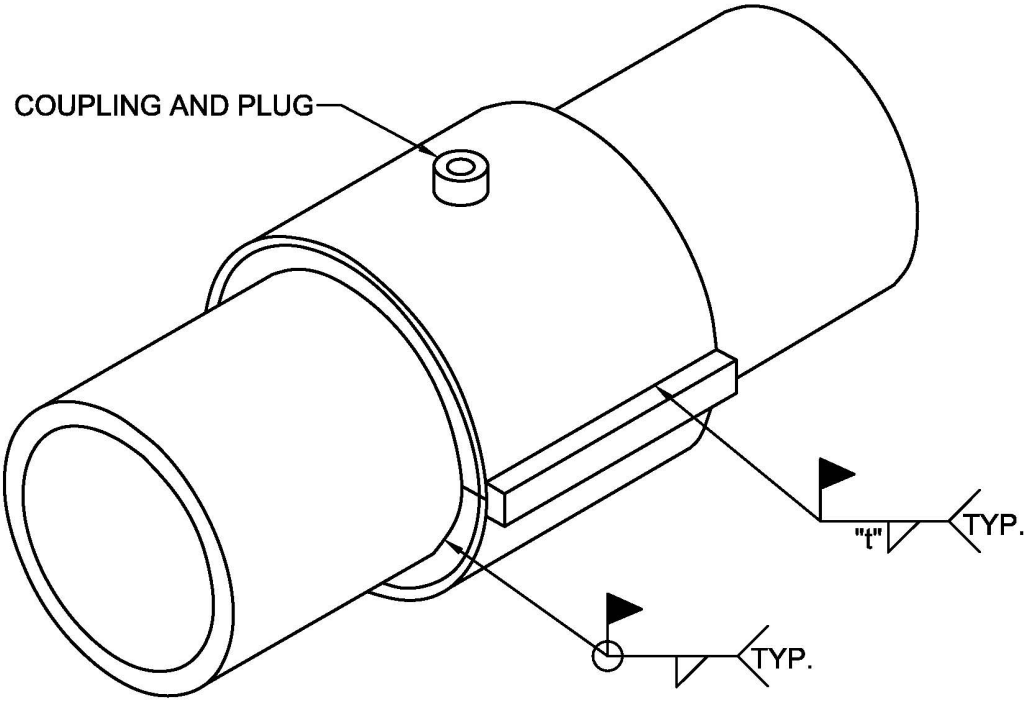

NOTE:
"t" = SADDLE PLATE THICKNESS
COATING AND ROD OR WIRE NOT SHOWN FOR CLAIRTY

REPAIR **PROCEDURES** (Cont.)

Gasketed Repair Saddle

C302 Repair Procedure

1. Excavate necessary clearance around the damaged area of pipe for installation of repair saddle. Recommended clearances are shown in drawing below.
2. The gasketed repair saddle is designed to be installed around the outside circumference of C302 pipe, so the outside of these pipes should be scrubbed or brushed clean. Remove any loose materials from the pipe exterior prior to the saddle be installed
3. Repair any damaged concrete in areas where the sealing gasket will be installed.
4. Wrap two – 15/16" rubber gaskets circumferentially around the pipe (one on each side of the damaged area) and splice together using Eastman 910 glue or equal. Lubricate the rubber gaskets.
5. Place two grommet gaskets on each 15/16" gasket so the grommet gaskets will be compressed between the gasket saddle halves. Remove the coupling plugs and place the two halves of the repair saddle over the damaged area of the pipe so the 15/16" gaskets fit in the gasket grooves of the saddle and so the grommet gaskets are between the saddle halves. One coupling is positioned at the bottom to allow water to escape; the other is positioned at the top to allow a quick setting grout to be poured into the recess between the pipe and the saddle. Tighten the two halves together using a set of come-alongs. Weld the two halves of the saddle together.
6. Bend the #12 gauge (0.1046") flaps over the grommet gaskets. Weld the flaps to the saddle gasket rings.
7. Install a plug in the bottom coupling.
8. Inspect the repair saddle welds for any leaks and repair as necessary.
9. Pour or inject a quick setting grout to completely fill the interior recess of the repair saddle.
10. Reinstall a plug in the top coupling and tighten.
11. Protect all exposed steel with a 1"(25mm) minimum thickness cement mortar.

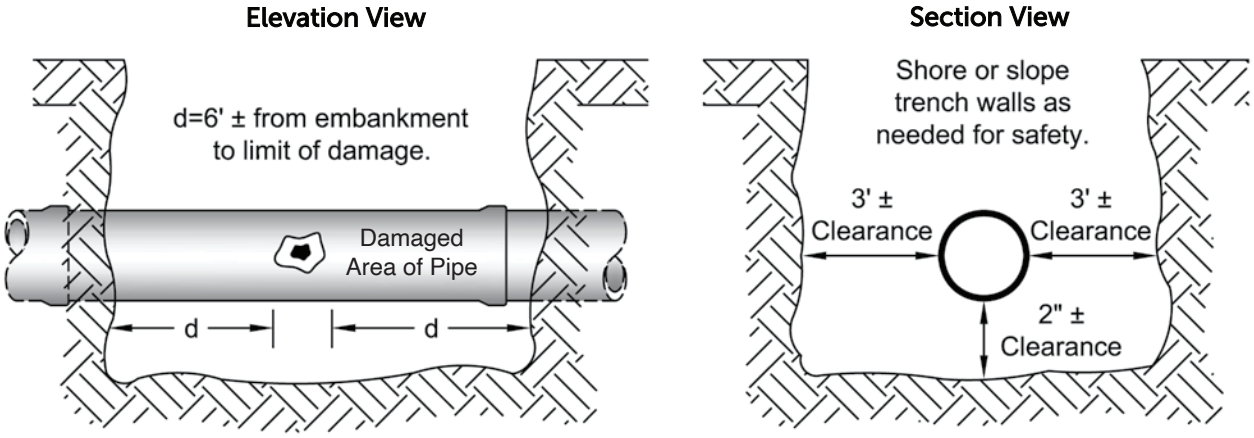

REPAIR **PROCEDURES** (Cont.)

Gasketed Repair Saddle (Cont.)

C302 Repair Procedure (Cont.)

Top Piece:

Steel plate typically 24" long, rounded 180°, with coupling and plug, attached to two steel plate 180° gasket groove rings.

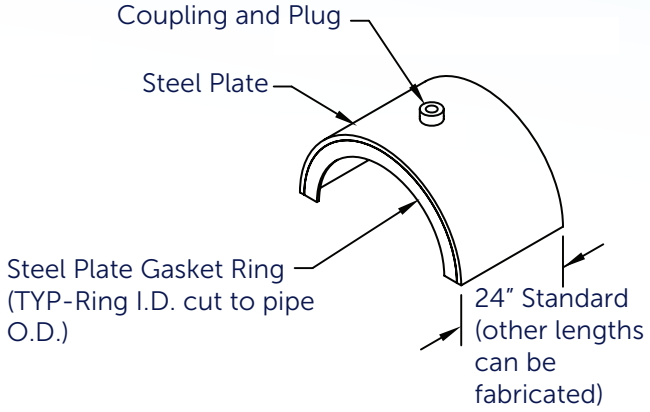

Bottom Piece:

Steel plate, typically 24" long, rounded 180°, with full length "t" thickness bars with #12 ga. flaps welded to each longitudinal edge, with coupling with plug, attached to two 3/8" plate 180° gasket groove rings.

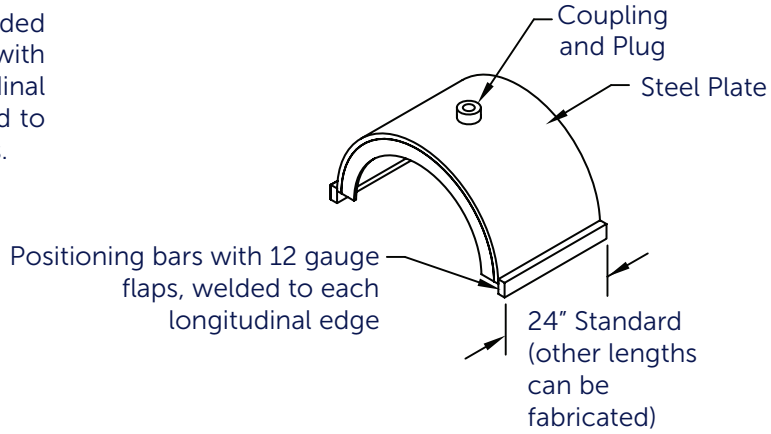

Note

Steel plate thickness "t" (in inches) shall meet the minimum fitting plate thickness listed in AWWA C302.

REPAIR **PROCEDURES** (Cont.)

Gasketed Repair Saddle (Cont.)

Assembled Repair Saddle

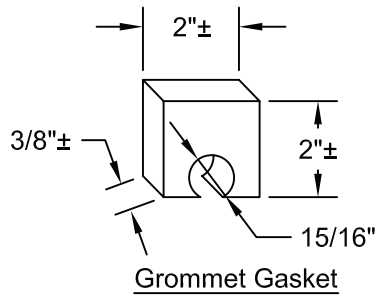

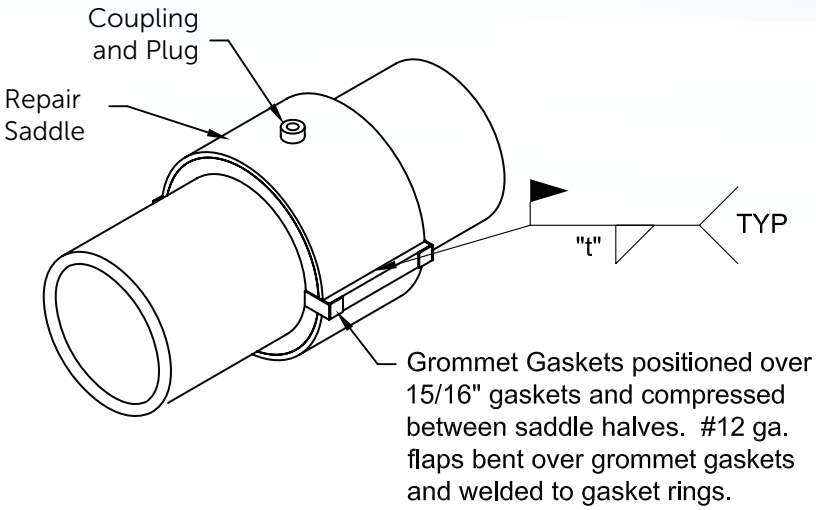

Note

"t" = Saddle plate thickness

Cross Section View

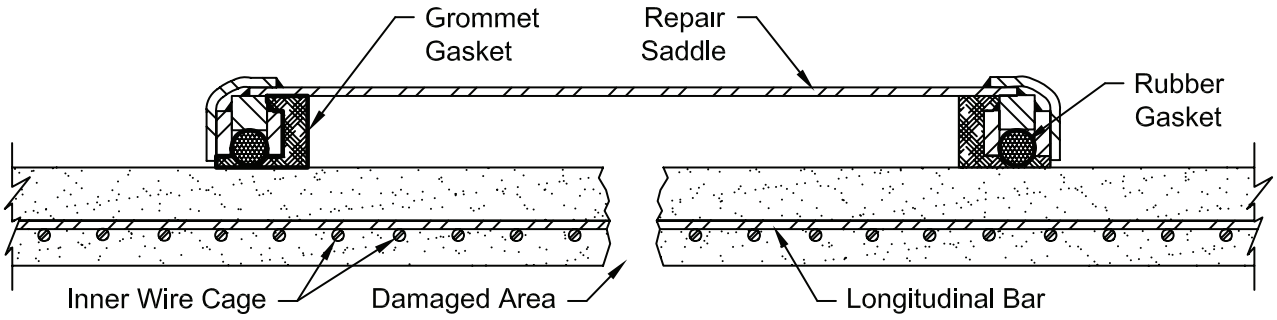

REPAIR **PROCEDURES** (Cont.)

Dry Tap

C303 Repair Procedure

1. Place the steel reinforcing collar on pipe centered at the desired location of the outlet and mark an area approximately 2" (50mm) larger than the area covered by the collar. Remove all coating within this area. Again, place the collar on the pipe at the desired location and mark on the reinforcing roads the outer limits of the collar. Remove the collar and flame cut the rods about 1" (25mm) inside the area marked. Bend the roads away from the pipe cylinder to permit placing the collar on the cylinder.

2. Place collar on cylinder and weld collar to cylinder around outside of collar using a watertight weld. Bend reinforcing rods down against collar and weld rods securely to collar.

3. Position outlet neck in center of outlet opening. Mark opening from inside of outlet. Remove outlet neck and flame cut cylinder as marked. Carefully remove mortar lining from the outlet area.

4. Position outlet neck over opening and weld around outside, completely filling space between collar and outlet neck with weld metal, making sure a strong watertight weld is obtained.

5. Close the outlet in a manner that assures watertightness. Cover all exposed steel with 1" (25mm) minimum thickness cement mortar.

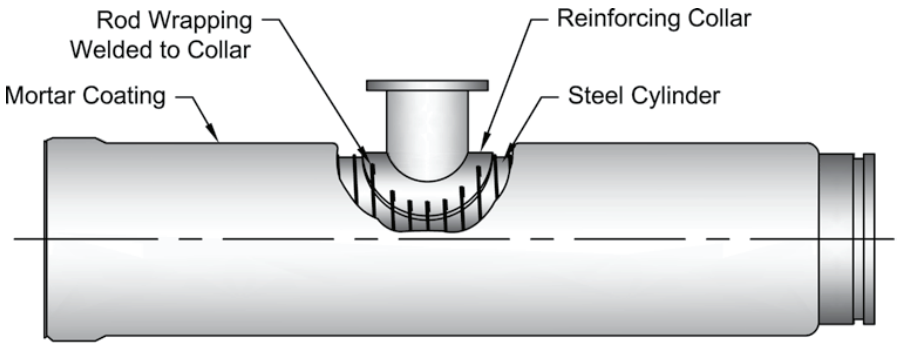

Caution

We recommend this procedure only be used for cylinders 12 gauge or thicker. Please contact ACPPA member companies for repair methods on thinner cylinders.

REPAIR **PROCEDURES** (Cont.)

Damaged Pipe Removal for Closure Placement

All Types of Concrete Pressure Pipe Repair Procedure

1. Excavate the area around the damaged section of pipe to adequately expose its entire length.
2. Carefully remove joint grout at each end of joint. Examine each joint to determine if joint is restrained. For restrained joints, the restraint will need to be disengaged prior to removal.
3. Cut or break out a section approximately 2' to 3' (610 mm to 915 mm) long from the damaged pipe. All types of pipe can be broken with backhoe teeth, a pneumatic spade or with a carbide-tipped circular saw. All steel can be severed with a cutting torch.
4. Work each remnant pipe end up and down until its joint disengages in a manner that does not damage the adjacent pipe joints. Remove the remnants and clean the adjacent bell and spigot in the trench. If necessary, stabilize the subgrade with crushed rock or other suitable material.

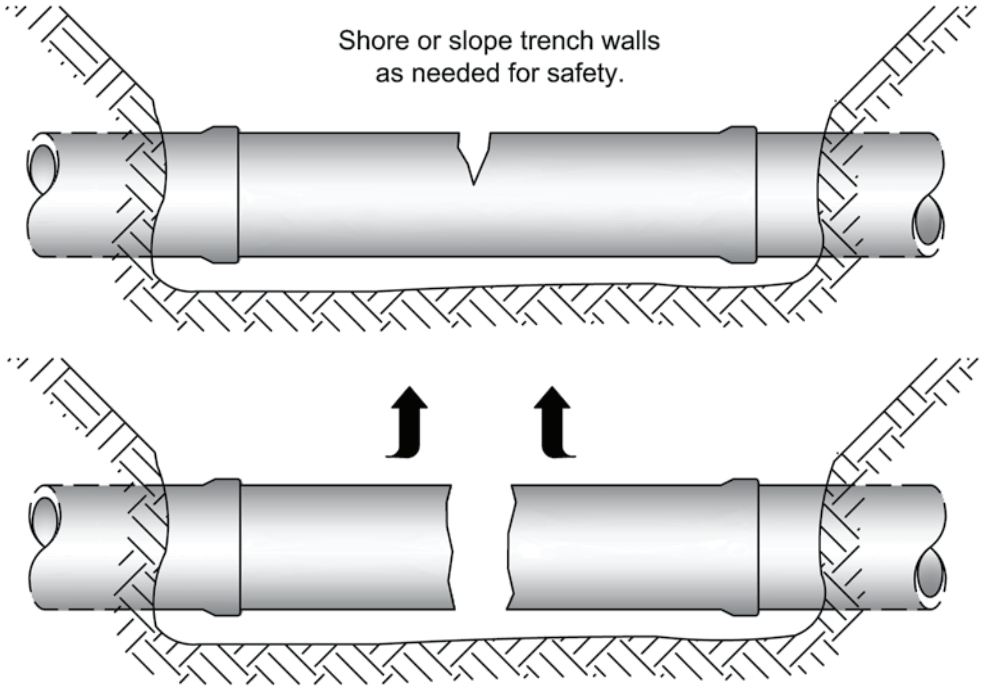

Note

Equipment required: backhoe for excavation; backhoe, crane or side-boom tractor for handling pipe; pipe cutting equipment, cutting torch, air compressor, water pump hoses, chains, cable slings, lights, ratchet type hoists.

REPAIR **PROCEDURES** (Cont.)

C303 Cut Pipe For Closure

Installation Procedure

1. Remove damaged pipe in the manner described on previous page.

2. On the replacement pipe, cut a 5" (127 mm) wide section from the middle of the pipe length using an abrasive circular saw, a chipping gun and cutting torch or similar suitable equipment.

3. Force a chisel or similar instrument carefully between the rod and cylinder and cut and peel the rod and coating off the cylinder for 5" (127 mm) longitudinally back from each cut end. Do not cut the rod off or puncture the cylinder.

4. If required, using the Bar-Wrapped Pipe Dry Tap procedure described on page 26, install a 24" (610 mm) manhole outlet on pipe 30" (750 mm) or larger to provide access to mortar the butt-strap interior.

5. Lubricate and install gasket. Install each portion of cut replacement pipe.

6. Position the halves butt strap around the cylinder and tighten them in position with a come-along. Place watertight fillet welds between the butt-strap and the cylinder around the circumference of each end of the butt-strap. Place watertight full penetration butt weld at the longitudinal edges between the butt-strap halves.

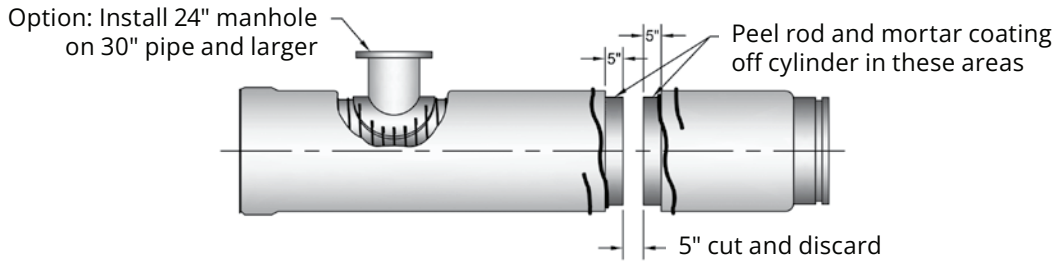

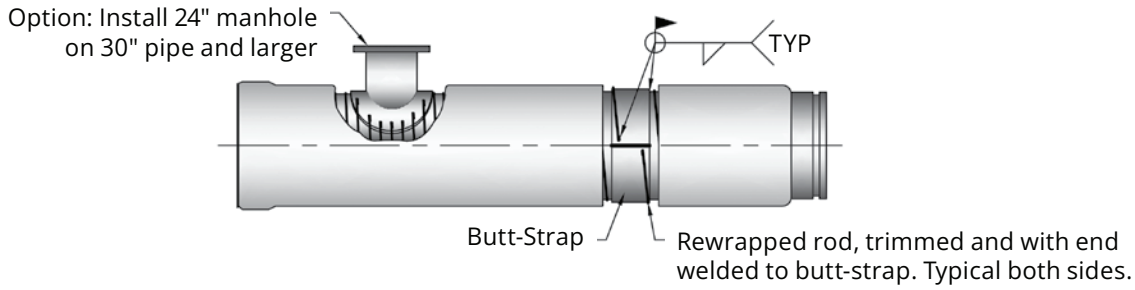

REPAIR **PROCEDURES** (Cont.)

C303 Cut Pipe For Closure (Cont.)

Installation Procedure (Cont.)

6. Rewind the rod wrap snugly against the cylinder at the original wrap spacing. Trim the rod after it overlaps the butt-strap and weld the rod end to the butt-strap.

7. Coat all exposed steel with a 1" (25 mm) minimum thickness cement mortar.

8. Provisions for access for mortar lining interior butt-strap is recommended.

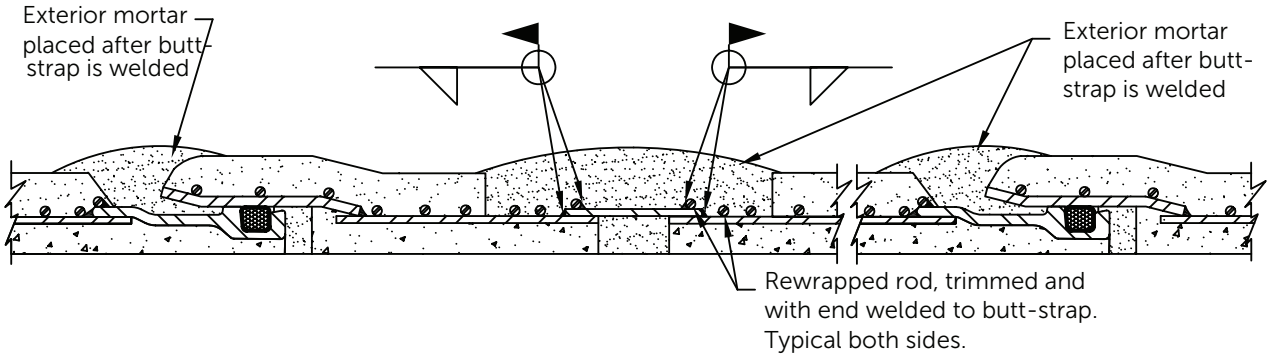

Note

All gasketed joints could be sealed by full circumferential welds if use of gaskets is not feasible. Contact ACPPA member companies if repair is required in a thrust restraint area.

REPAIR **PROCEDURES** (Cont.)

Reinforcing Clamp

C301(L) and C301(E) Repair Procedure

1. Remove loose mortar or concrete around the damaged area outside the cylinder. If the cylinder is visible, visually inspect it to assure the cylinder is watertight and has not been torn, split or punctured. The cylinder must be undamaged and watertight before proceeding with the repair. Repair damaged mortar coating or concrete core with cement rich patching material.

2. Secure clamp to pipe so one clamp half covers the repair area.

3. Coat all exposed steel of clamp and bolts with a 1" (25 mm) minimum thickness cement mortar.

Component Parts – Assembly

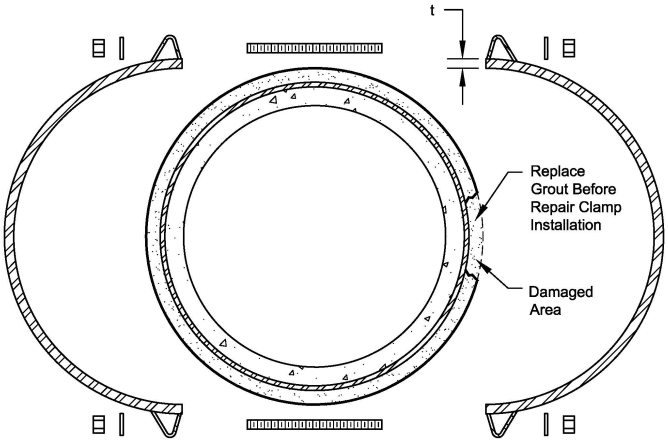

Note

Equipment required: backhoe or drag-line for excavation; backhoe, crane or side-boom tractor for handling pipe, cutting torch, air compressor, water pump hoses, chains, cable slings, lights, ratchet type hoists.

$$\text{“t” Min} = \frac{\text{(I.D. Saddle) (Working Pressure)}}{2f_s}$$

* fs = 18,000 psi

REPAIR **PROCEDURES** (Cont.)

Cylinder Repair Sleeve

C301(L) and C301(E) Repair Procedure

1. Clean pipe exterior surface in area where saddle is to be installed. Remove any irregularities extending beyond the normal contour of the pipe surface. Check all measurements to confirm glad is correct size for the damaged pipe and the damaged area does not fall outside the seal of the repair gland.

2. Position gland over the damaged area of the pipe and mark around the gland where mortar coating is to be removed.

3. Carefully remove mortar coating from the marked area and not damaging any prestress wire.

4. Confirm all grout gaskets are in place around the edge of the saddle over the opening and install the straps. Tighten straps with only sufficient torque to lightly seal the grout gaskets, alternating from one side of the saddle to the other - starting at the outside straps on each side and working in toward the center.

5. Pour cement grout into the grout horns in the saddle, filling the space between the saddle and the pipe. Tap the saddle with a hammer to vibrate the grout into place. After the grout has set, tighten the 3/4" bolts on the straps to approximately 85-110 ft.-lbs. torque.

6. Carefully cut and remove exposed prestress wires to provide clearance for the gland to seal against the cylinder.

7. Check the gasket in the gland to confirm it is undamaged and in its retaining groove.

8. Install threaded studs in the saddle outlet to assist aligning the gland properly. Install gland in the saddle outlet with contour of seated gasket matches the contour of the pipe steel cylinder. Install the remainder of draw bolts. Check seated gasket seat and all alignment. Tighten the draw bolts of the outer circle.

9. Pour cement mortar mix into the opening between the gland and the saddle, grout hole in the saddle neck and completely filling the space around the gland. Complete the installation with minimum 1" thick of cement mortar or concrete around the entire assembly for long term protection.

Components Parts - Assembly

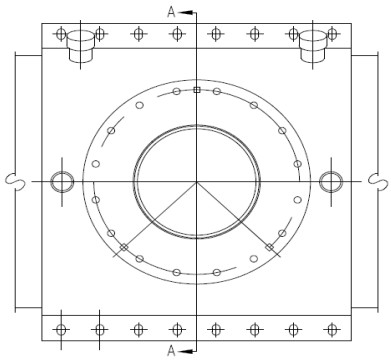

SIDE VIEW

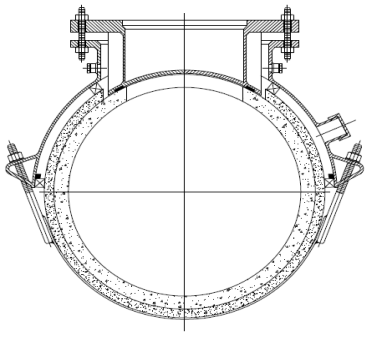

SECTION A–A

AMERICAN
Concrete Pressure Pipe
ASSOCIATION

ACPPA Headquarters
69 E Lake Road
Hattiesburg, MS 39402
T 714.801.0298
email: support@acppa.org
www.acppa.org